P-6012
X468

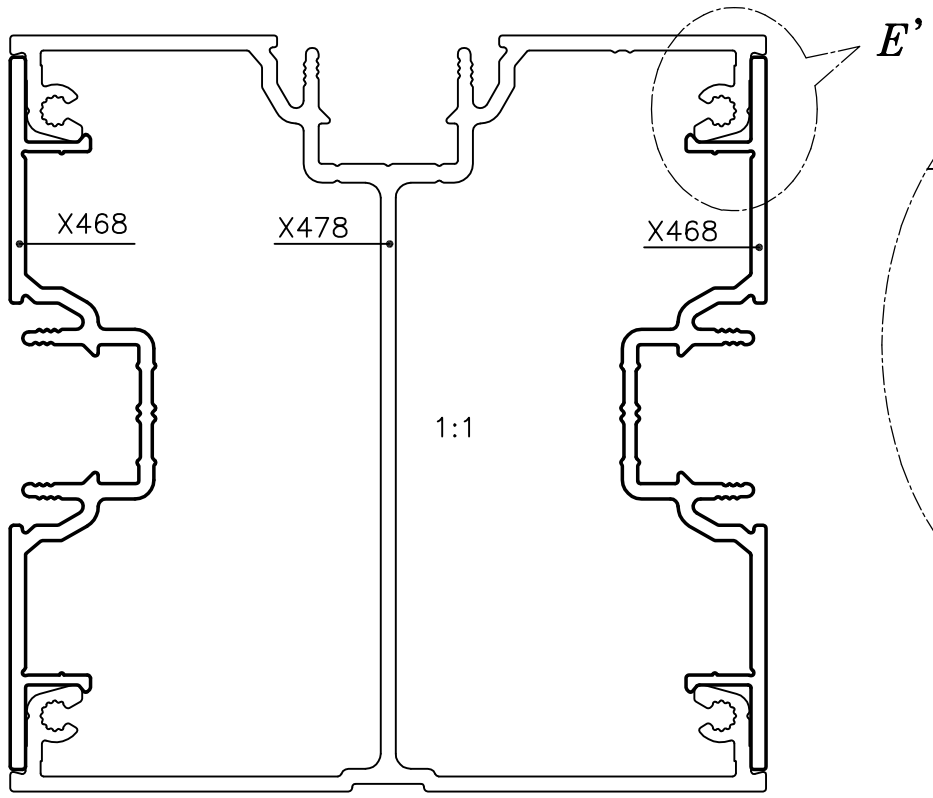

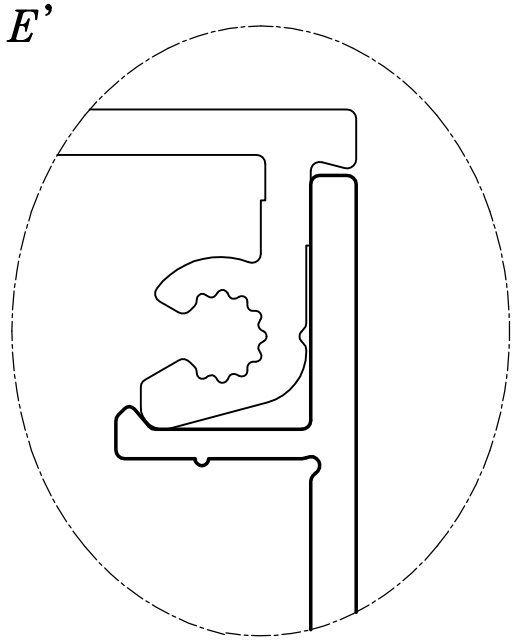

DETAIL-E
SCALE:-3:1

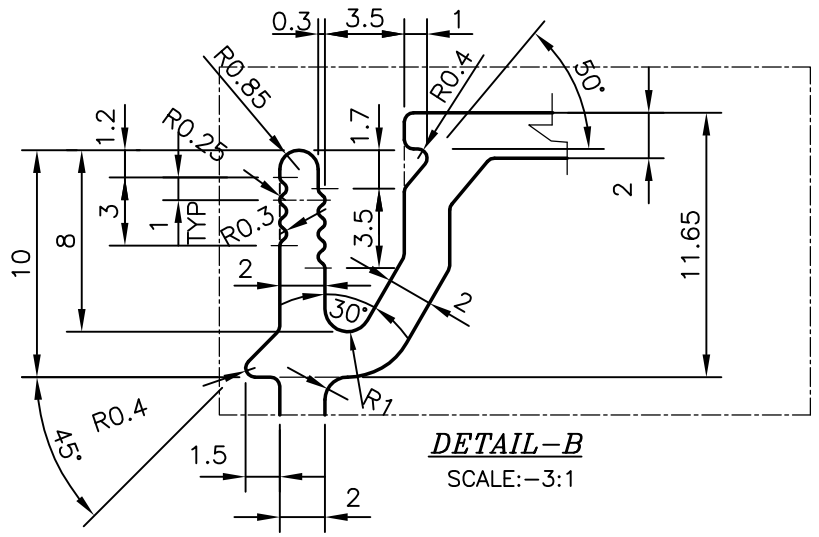

DETAIL-B
SCALE:-3:1

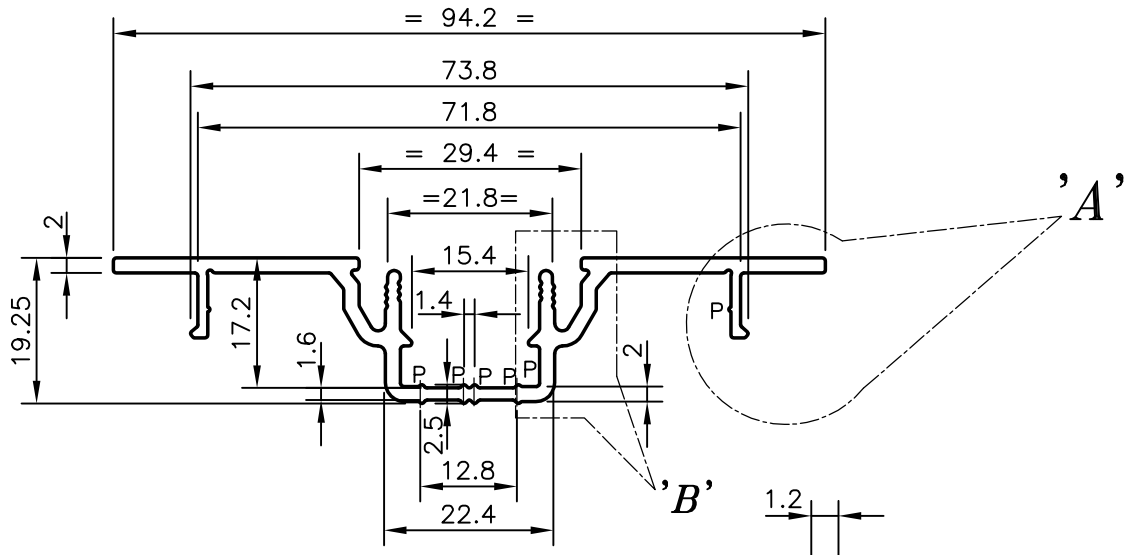

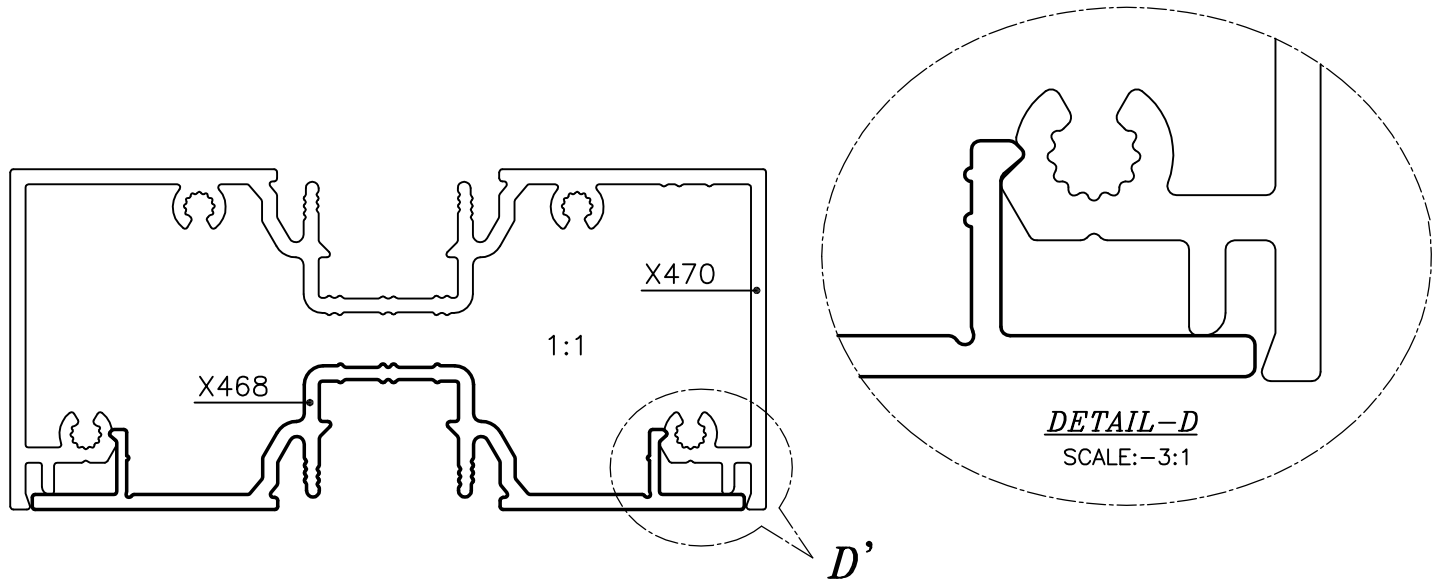

DETAIL-D
SCALE:-3:1

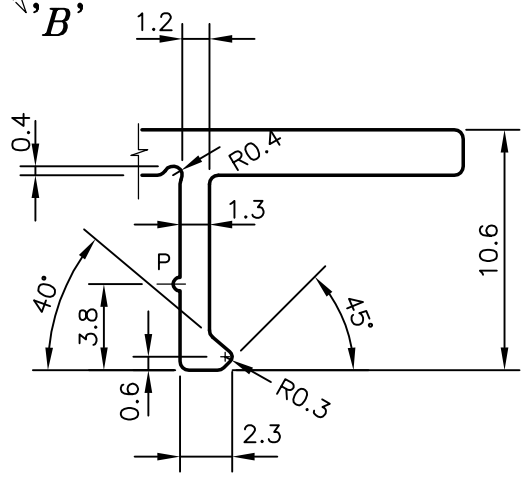

DETAIL AT 'A'

GENERAL WALL THICKNESS= 2.0 mm
P= PIP 0.3x90°xR0.3

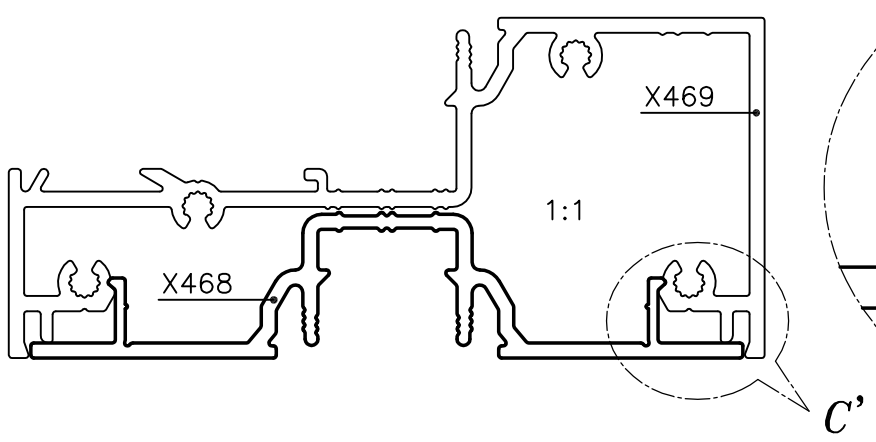

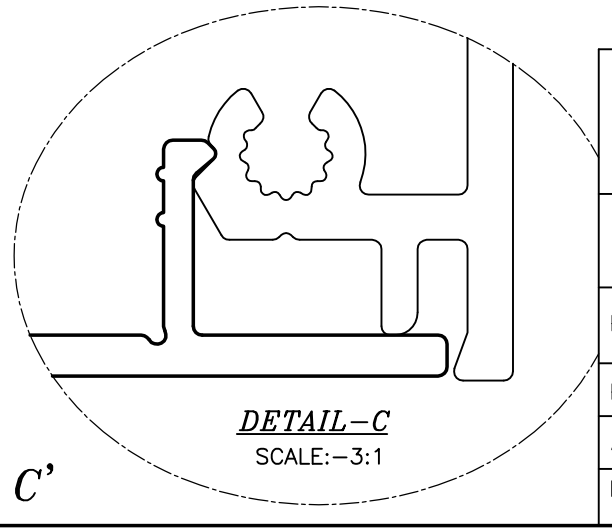

DETAIL-C
SCALE:-3:1

JINDAL
SYMBOL OF QUALITY
AN ISO 9001 COMPANY

JINDAL ALUMINIUM LTD.

BANGALORE-560073 (INDIA)

1. ALL DIMENSIONS ARE IN mm.
2. ROUND OFF ALL SHARP CORNERS WITH 0.40 mm.
3. TOLERANCES WILL BE AS PER BS:1474-1987 UNLESS OTHERWISE SPECIFIED

PARTY'S NAME	J.CAPITAL SHOPFRONT LTD.,U.K
PARTY'S DRAWING No.	AS PER SAMPLE(GS-9)
ALLOY & TEMPER	6063 T6
DESCRIPTION	CLIP SECTION

	NAME	DATE
DRAWN	J.P.KAUSHIK	06-12-2005
CHECKED		
APPROVED		

SCALE	1:1
AREA mm^2	300.94
PERIMETER mm.	321.955
WEIGHT kg/m	0.813

DRAWING No.	SECTION No.
P-6012	-
X468	X468