P−6020	
X473	

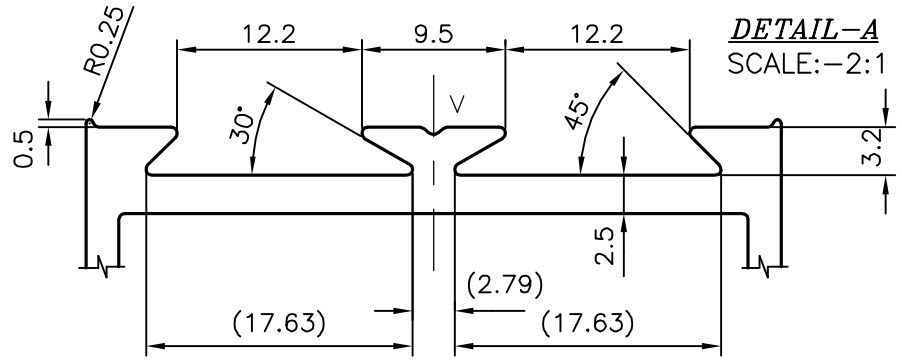

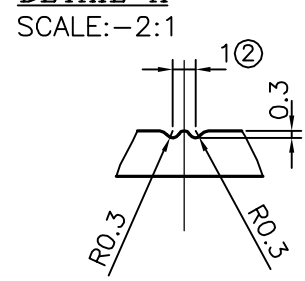

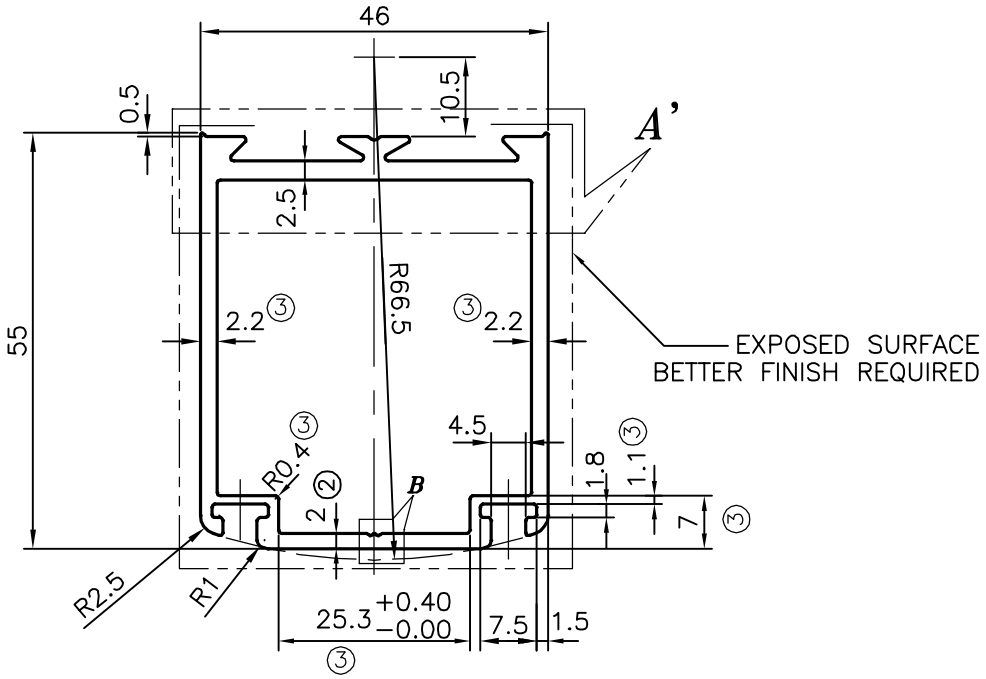

V = VEE GROOVE 0.5x90°xR0.5 (1 PLACE)

ISSUE−3

DIMENSION CHANGED FROM

25.00 TO 25.3 +0.40 −0.00

7.50 TO 7.00

1.60 TO 1.10

RADIUS R1.00 TO R0.40 &

WEIGHT ALSO CHANGED FROM 1.355 kg/m TO 1.263 kg/m

ISSUE−2

THICKNESS CHANGED FROM 2.5 TO 2.0 mm & V GROOVE ADDED

WEIGHT ALSO CHANGED FROM 1.390 kg/m TO 1.355 kg/m

			NAME	DATE
SYMBOL OF QUALITY AN ISO 9001 COMPANY	*JINDAL ALUMINIUM LTD.* *BANGALORE−560073 (INDIA)*	DRAWN	J.P.KAUSHIK	24−10−2016
		CHECKED		
		APPROVED	B.NATARAJ	28−10−2016

1. ALL DIMENSIONS ARE IN mm.
2. ROUND OFF ALL SHARP CORNERS WITH 0.40 mm.
3. TOLERANCES WILL BE AS PER BS:EN−755−9 UNLESS OTHERWISE SPECIFIED

SCALE	1:1
AREA mm^2	467.8
PERIMETER mm.	253.055
WEIGHT kg/m	1.263

PARTY'S NAME	J. CAPITAL SHOPFRONT LTD., U.K.
PARTY'S DRAWING No.	PD−16
ALLOY & TEMPER	6063 T6
DESCRIPTION	DOOR SECTION

DRAWING No.	SECTION No.
P−6020	−
X473	X473−ISSUE−3