P–6024
X477

GENERAL WALL THICKNESS = 2 mm
P = PIP 0.3x90°xR0.3 (12 PLACES)
V = VEE GROOVE 0.3x90°xR0.3 (1 PLACES)

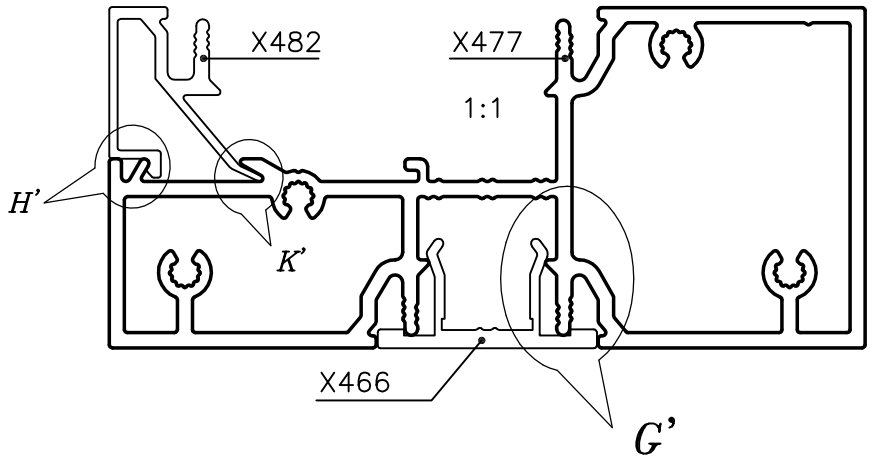

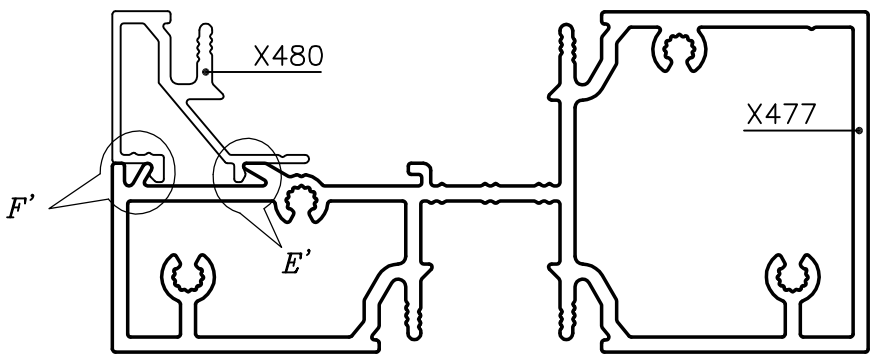

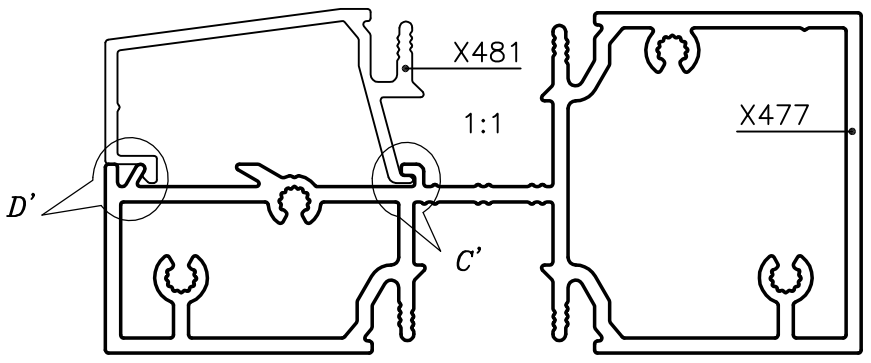

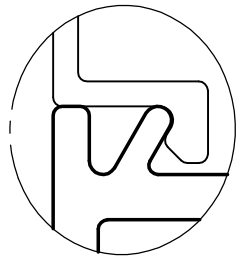

DETAIL–H
SCALE:–3:1

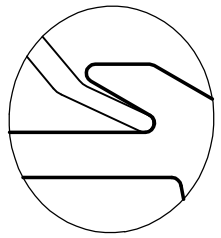

DETAIL–K
SCALE:–3:1

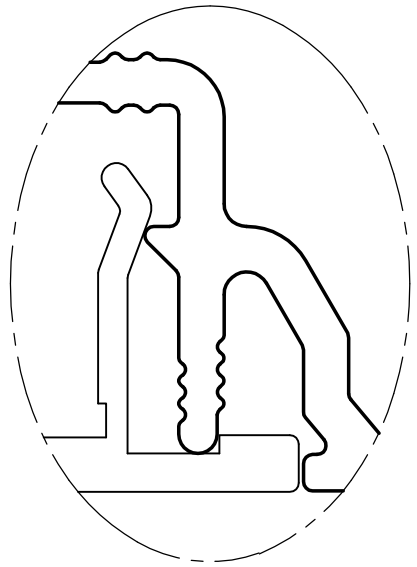

DETAIL–G
SCALE:–3:1

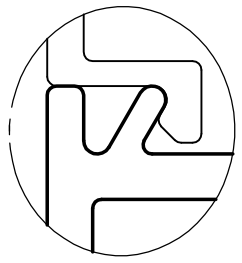

DETAIL–D
SCALE:–3:1

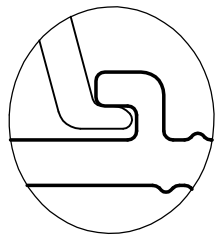

DETAIL–D
SCALE:–3:1

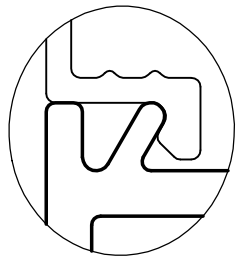

DETAIL–F
SCALE:–3:1

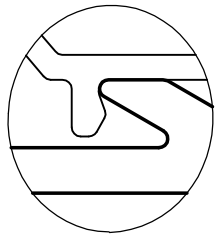

DETAIL–E
SCALE:–3:1

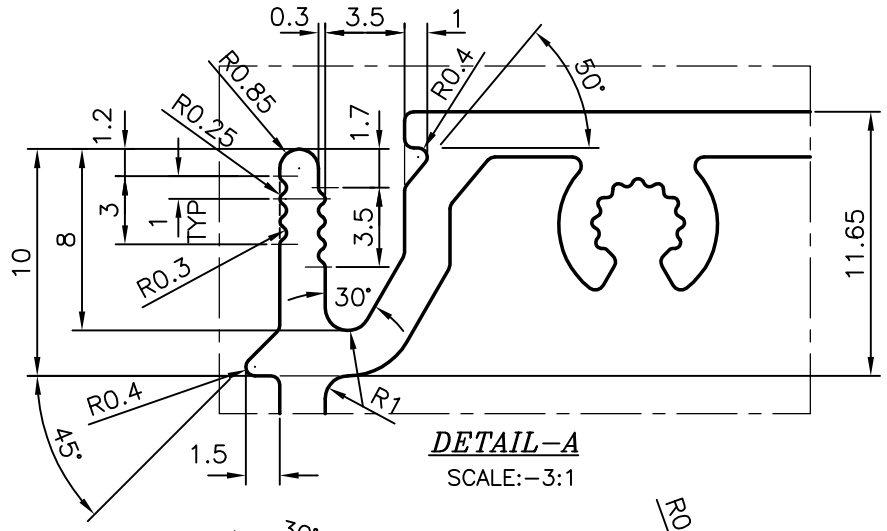

DETAIL–A
SCALE:–3:1

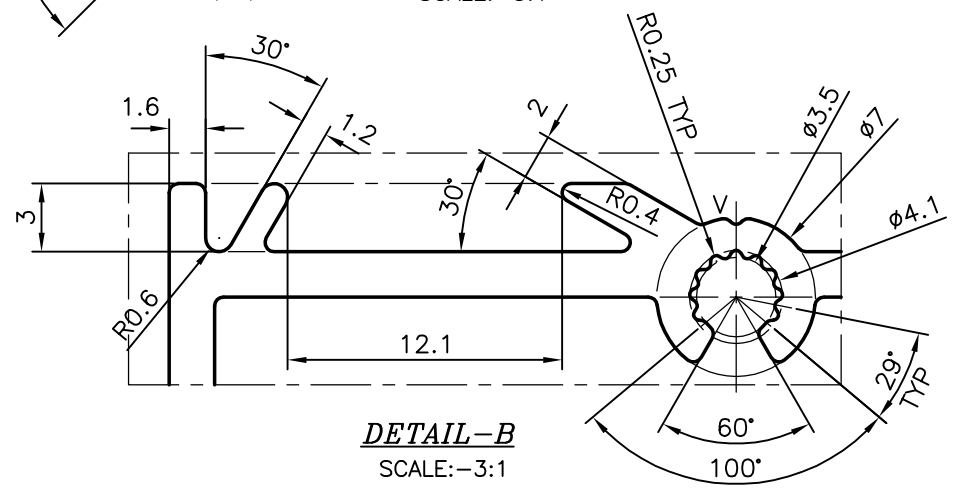

DETAIL–B
SCALE:–3:1

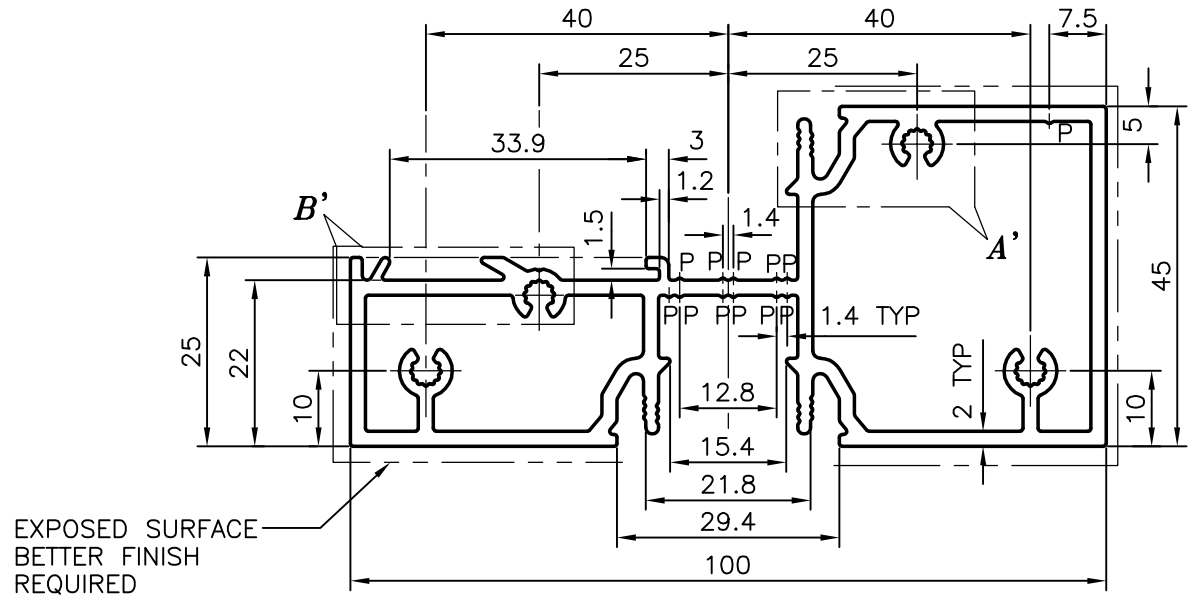

			NAME	DATE
SYMBOL OF QUALITY AN ISO 9001 COMPANY	JINDAL ALUMINIUM LTD. BANGALORE–560073 (INDIA)	DRAWN	MALINGAPPA	03–12–2005
		CHECKED		
		APPROVED		

1. ALL DIMENSIONS ARE IN mm.
2. ROUND OFF ALL SHARP CORNERS WITH 0.40 mm.
3. TOLERANCES WILL BE AS PER IS:6477–1983 UNLESS OTHERWISE SPECIFIED

PARTY'S NAME	J. CAPITAL SHOPFRONT LTD., U.K.	SCALE	1:1
		AREA mm^2	761.354
		PERIMETER mm.	409.688
		WEIGHT kg/m	2.056
PARTY'S DRAWING No.	AS PER SAMPLE	DRAWING No.	SECTION No.
ALLOY & TEMPER	6063 T6	P–6024	–
DESCRIPTION	MISC. SECTION	X477	X477