P–6030
X481

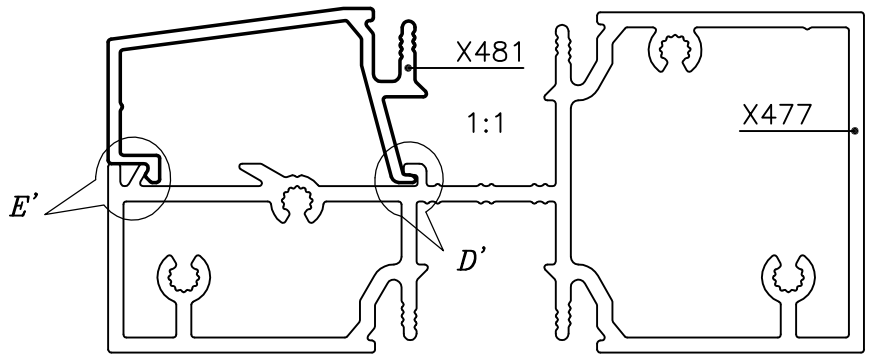

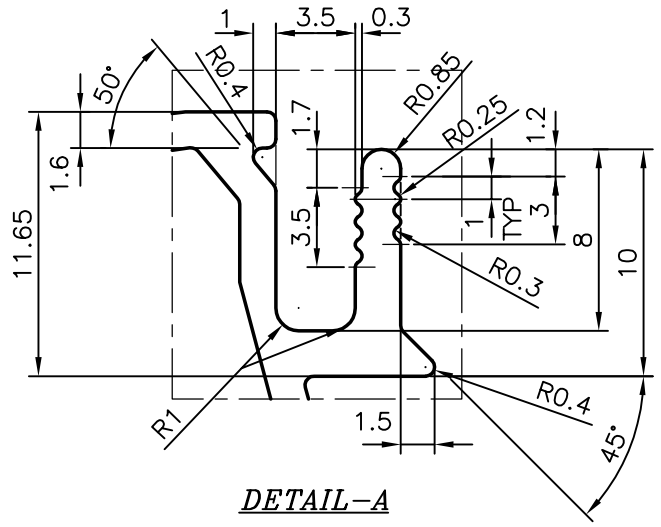

DETAIL–A

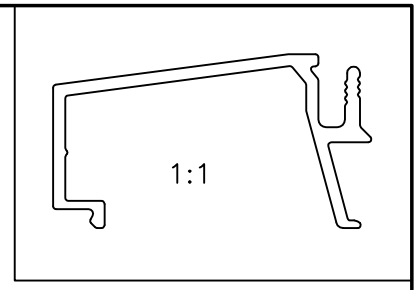

GENERAL WALL THICKNESS = 1.6 mm
P = PIP 0.3x90°xR0.3 (1 PLACES)

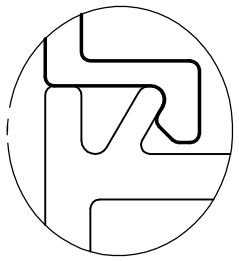

DETAIL–D
SCALE:–3:1

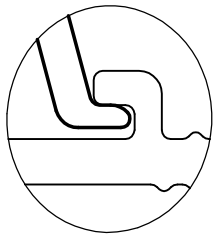

DETAIL–D
SCALE:–3:1

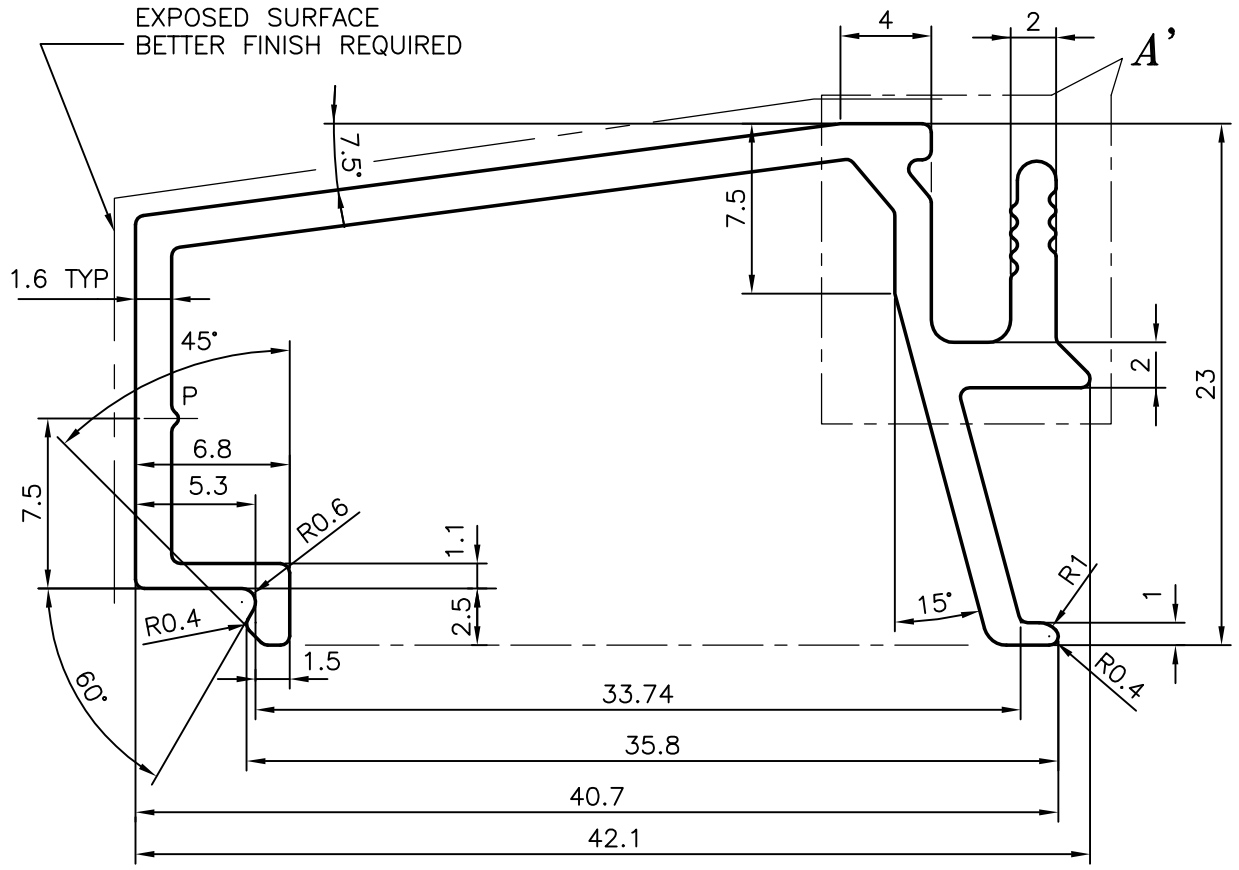

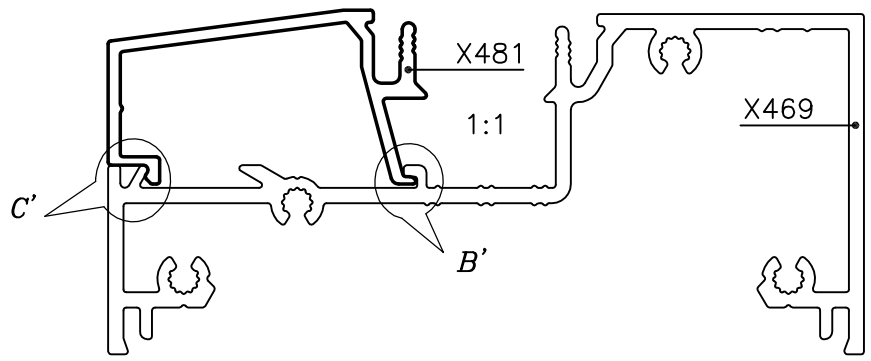

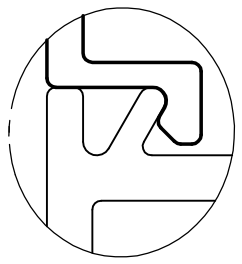

DETAIL–C
SCALE:–3:1

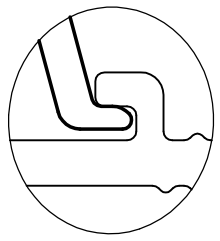

DETAIL–B
SCALE:–3:1

JINDAL
SYMBOL OF QUALITY
AN ISO 9001 COMPANY

JINDAL ALUMINIUM LTD.
BANGALORE–560073 (INDIA)

1. ALL DIMENSIONS ARE IN mm.
2. ROUND OFF ALL SHARP CORNERS WITH 0.40 mm.
3. TOLERANCES WILL BE AS PER BS:1474–1987 UNLESS OTHERWISE SPECIFIED

PARTY'S NAME	J. CAPITAL SHOPFRONT LTD., U.K.
PARTY'S DRAWING No.	AS PER SAMPLE
ALLOY & TEMPER	6063 T6
DESCRIPTION	GLAZING CLIP

	NAME	DATE
DRAWN	MALINGAPPA	07–12–2005
CHECKED		
APPROVED		

SCALE	3:1
AREA mm^2	152.925
PERIMETER mm.	190.466
WEIGHT kg/m	0.413

DRAWING No.	SECTION No.
P–6030	–
X481	X481