P-6625-1

X618

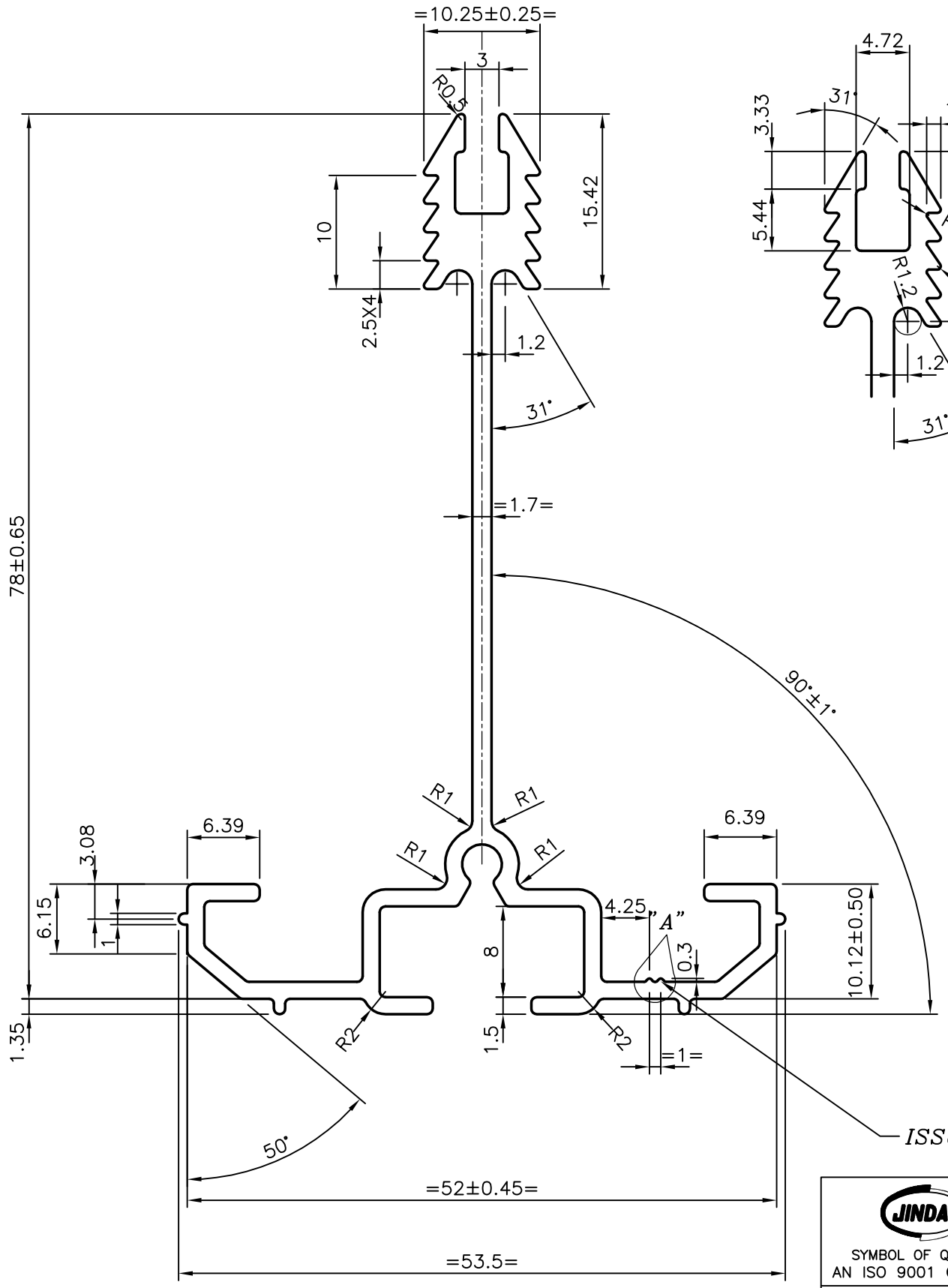

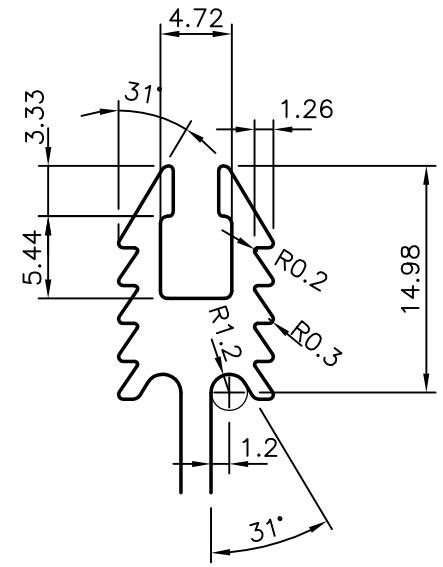

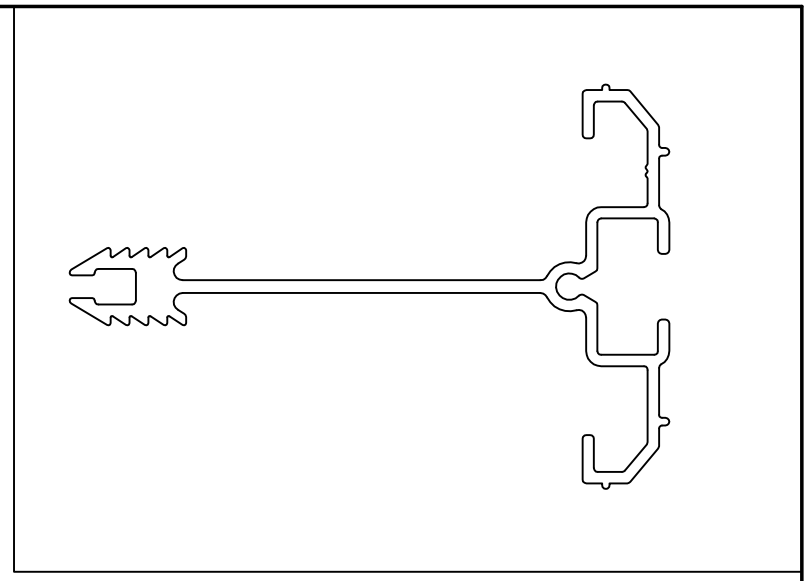

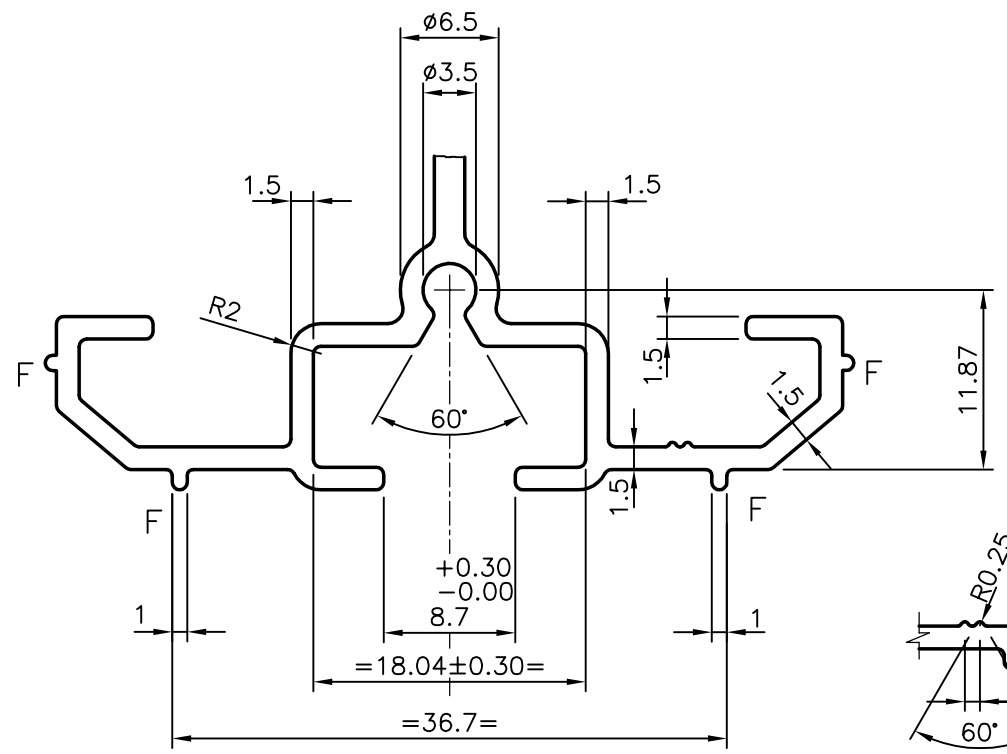

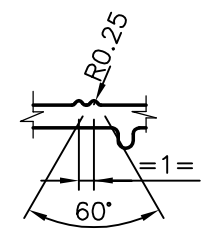

DETAIL AT "A"

ISSUE-2 ID PIPS ADDED AS PER PARTY'S REQUIREMENT

F = FULL RADIUS (4 PLACES)

UNSPECIFIED CORNERS WITH 0.50 mm RADIUS
FLATNESS ACROSS BASE OF SECTION ± 0.50

JINDAL
SYMBOL OF QUALITY
AN ISO 9001 COMPANY

JINDAL ALUMINIUM LTD.
BANGALORE-560073 (INDIA)

1. ALL DIMENSIONS ARE IN mm.
2. ROUND OFF ALL SHARP CORNERS WITH 0.40 mm.
3. TOLERANCES WILL BE AS PER IS:3965-1981 UNLESS OTHERWISE SPECIFIED

PARTY'S NAME	SYNSEAL EXTRUSIONS LTD., U.K
PARTY'S DRAWING No.	XT1/2 ISSUE No ORDER B
ALLOY & TEMPER	6063 T6
DESCRIPTION	LIGHT TRANSOM XT1

	NAME	DATE
DRAWN	J.P.KAUSHIK	23-02-2007
CHECKED		
APPROVED		

SCALE	2:1
AREA mm^2	338.742
PERIMETER mm.	397.656
WEIGHT kg/m	0.915

DRAWING No.	SECTION No.
P-6625-1	
X618	X618(ISSUE-2)