P–7475
X757

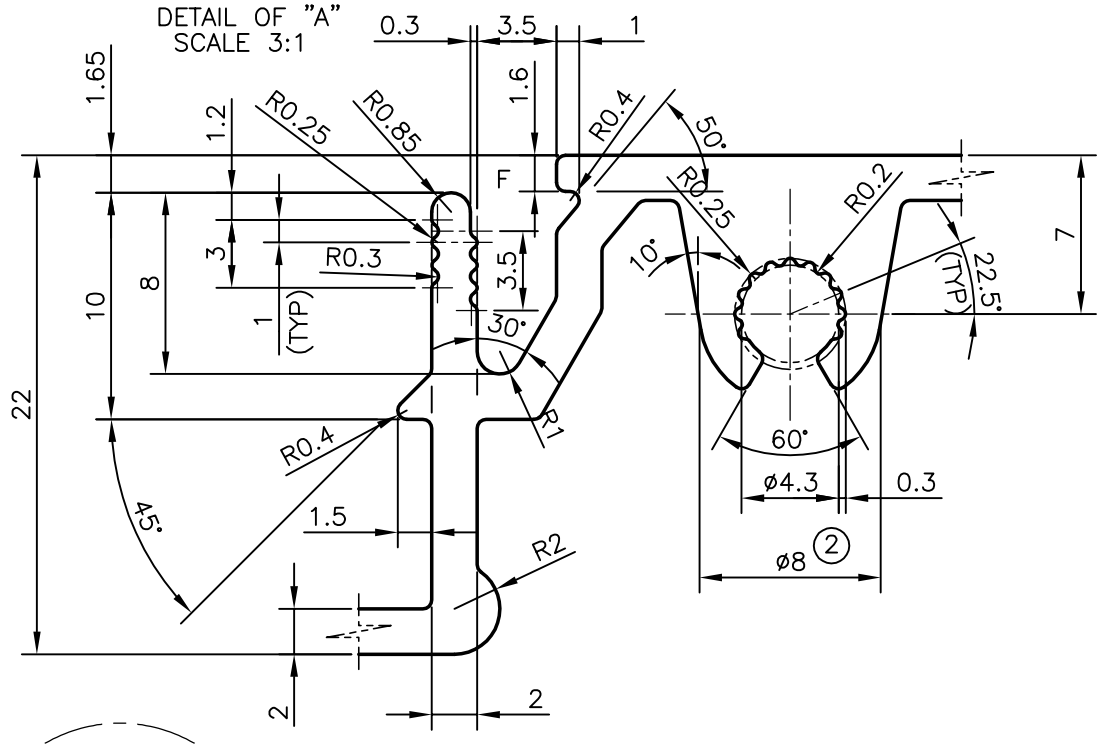

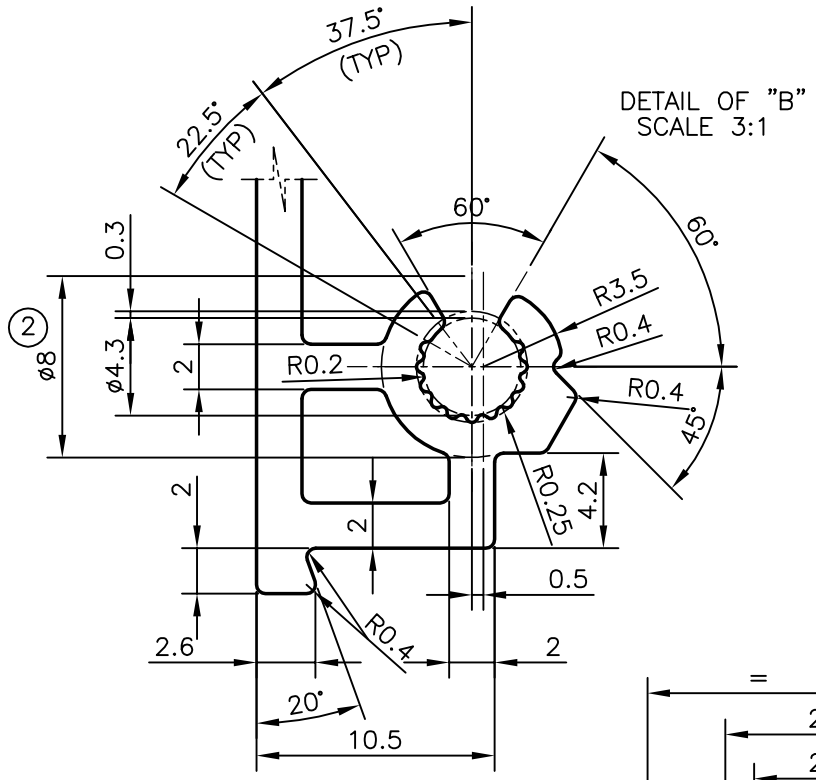

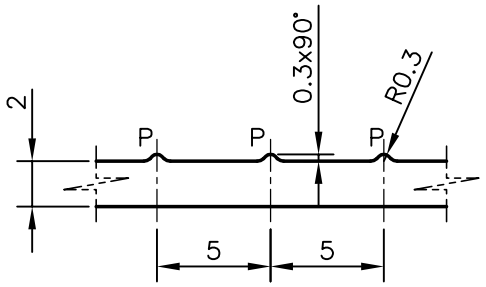

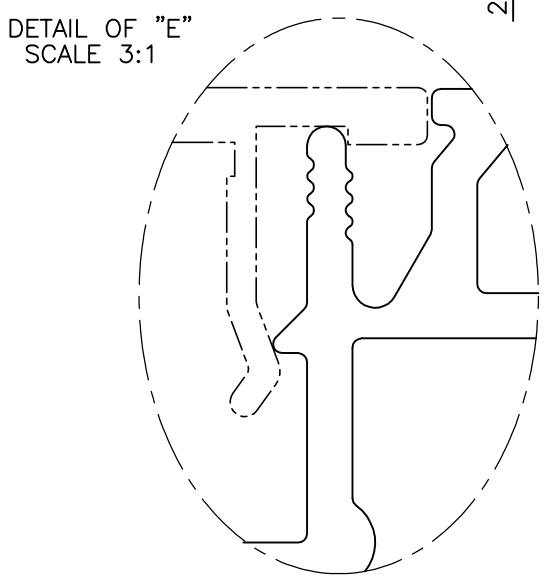

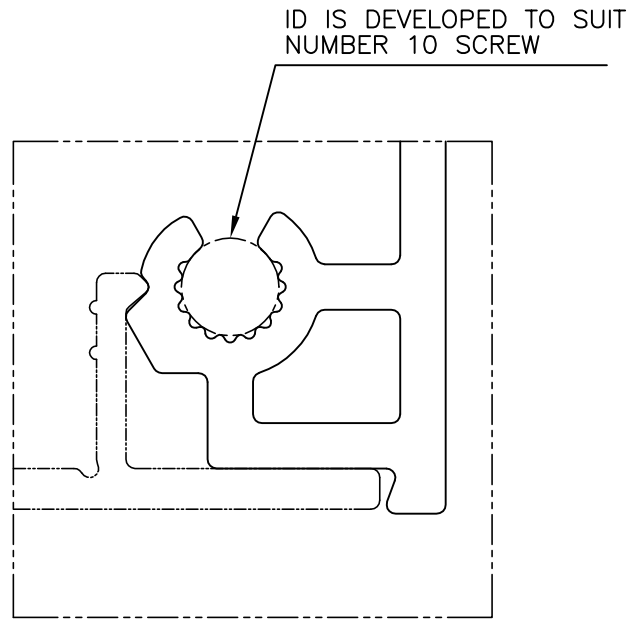

DETAIL OF "D"
SCALE 3:1

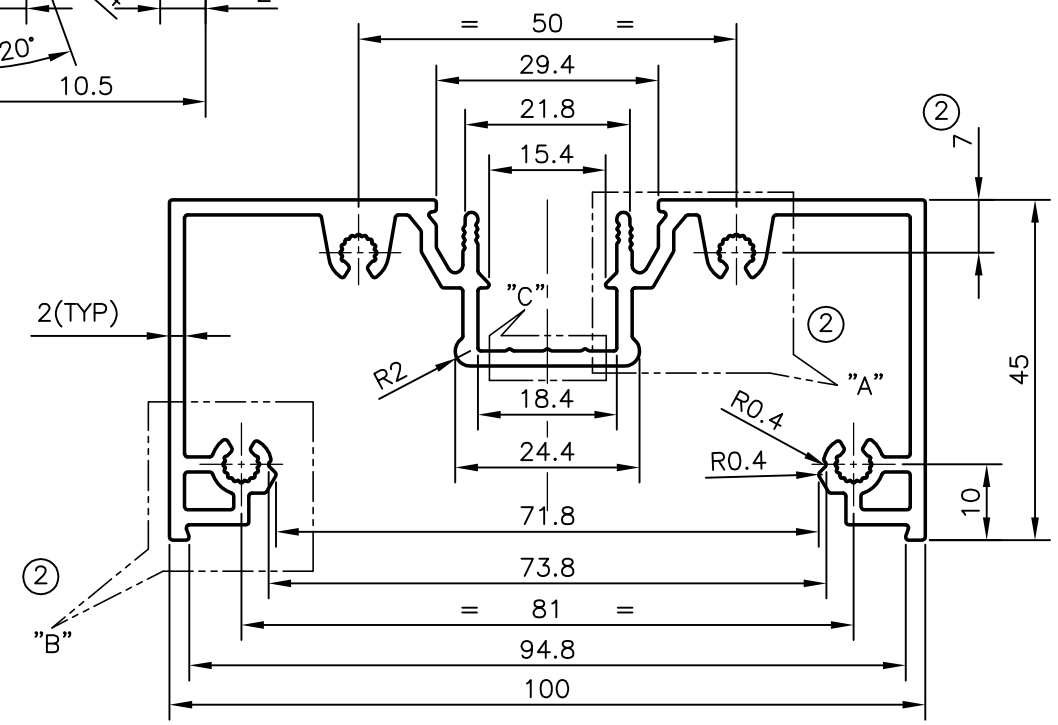

ISSUE–2 DIMENSION CHANGED FROM
ø7.00mm TO ø8.00mm
10.00mm TO 7.00mm
DETAIL "B" SCREW BOX POSITION CHANGED
DETAIL "A" SCREW SHAPE & POSITION CHANGED &
WEIGHT ALSO CHANGED FROM 1.826 TO 1.889 kg/M

MATCHING SECTION
SCALE 1:1

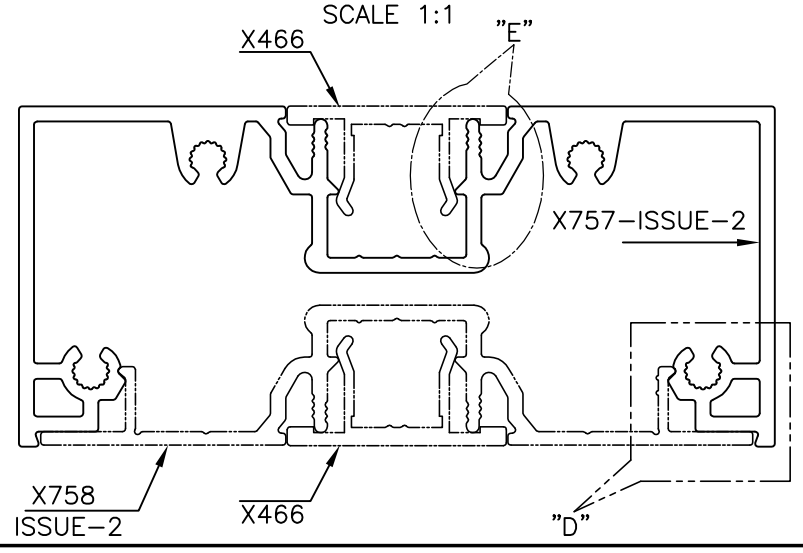

GENERAL WALL THICKNESS = 2.00 mm
P = PIP 0.3x90° (3 PLACES)

			NAME	DATE
JINDAL SYMBOL OF QUALITY AN ISO 9001 COMPANY	*JINDAL ALUMINIUM LTD.* *BANGALORE–560073 (INDIA)*	DRAWN	PRASANN. H	14–05–2008
		CHECKED		
		APPROVED		
1. ALL DIMENSIONS ARE IN mm. 2. ROUND OFF ALL SHARP CORNERS WITH 0.40 mm. 3. TOLERANCES WILL BE AS PER BS:EN–755 UNLESS OTHERWISE SPECIFIED		SCALE		1:1
		AREA mm²		699.766
		PERIMETER mm.		611.879
PARTY'S NAME	MEERA ALUMINIUM UK LTD., UNITED KINGDOM	WEIGHT kg/m		1.889
		DRAWING No.		SECTION No.
PARTY'S DRAWING No.	GS–1001 & AS PER REQUIREMENT	P–7475		–
ALLOY & TEMPER	6063 T6	X757		X757–ISSUE–2
DESCRIPTION	MISC. SECTION			