P–7540
X760

DETAIL OF "E"
SCALE 3:1

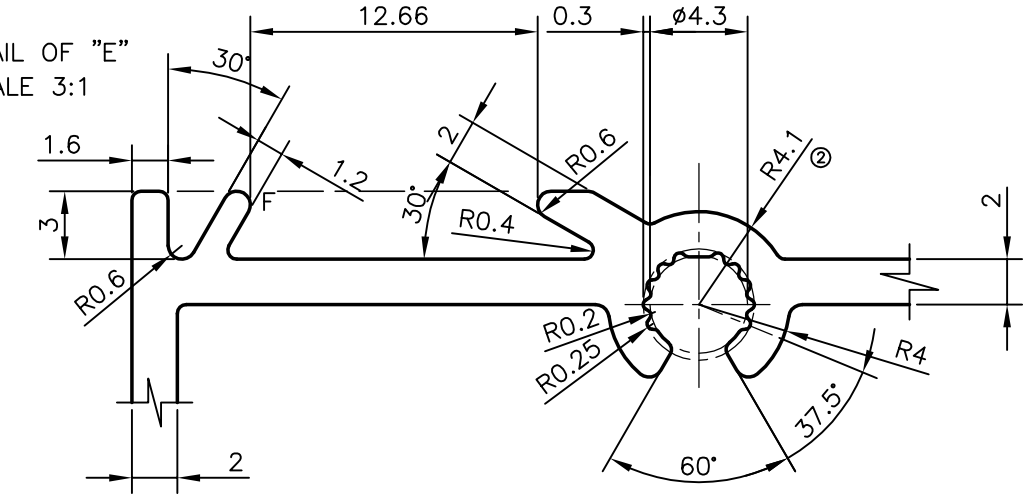

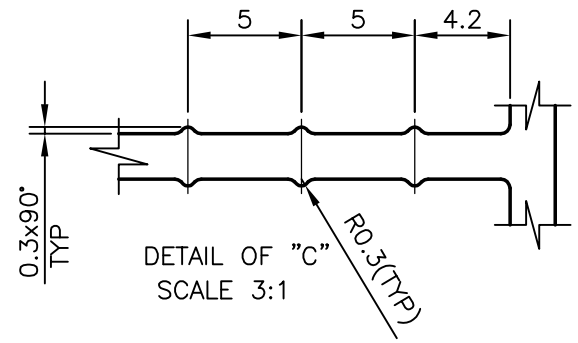

DETAIL OF "C"
SCALE 3:1

DETAIL OF "A"
SCALE 3:1

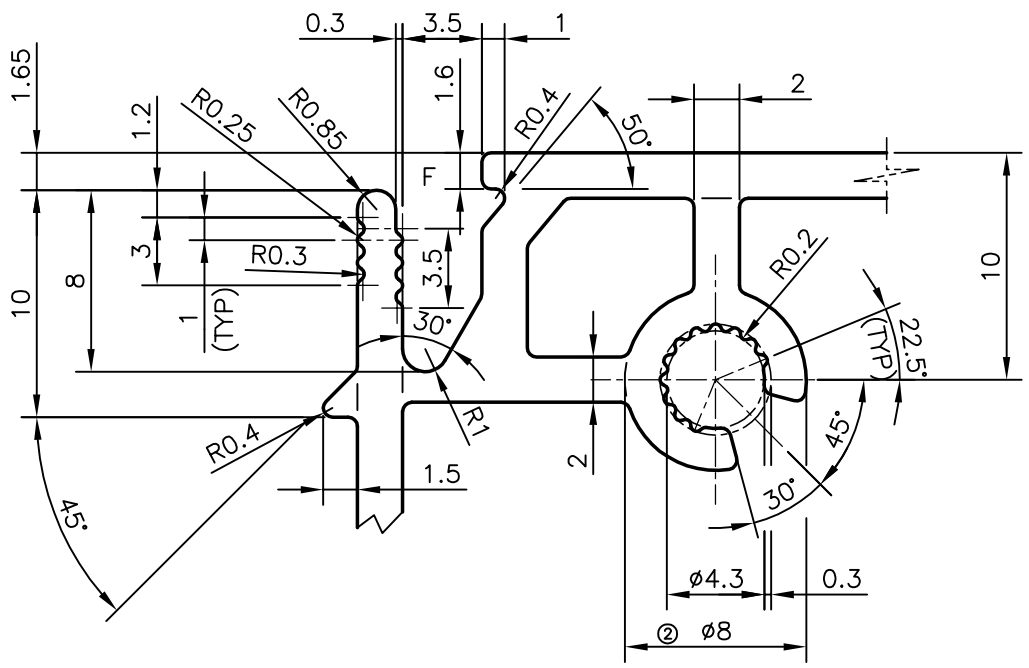

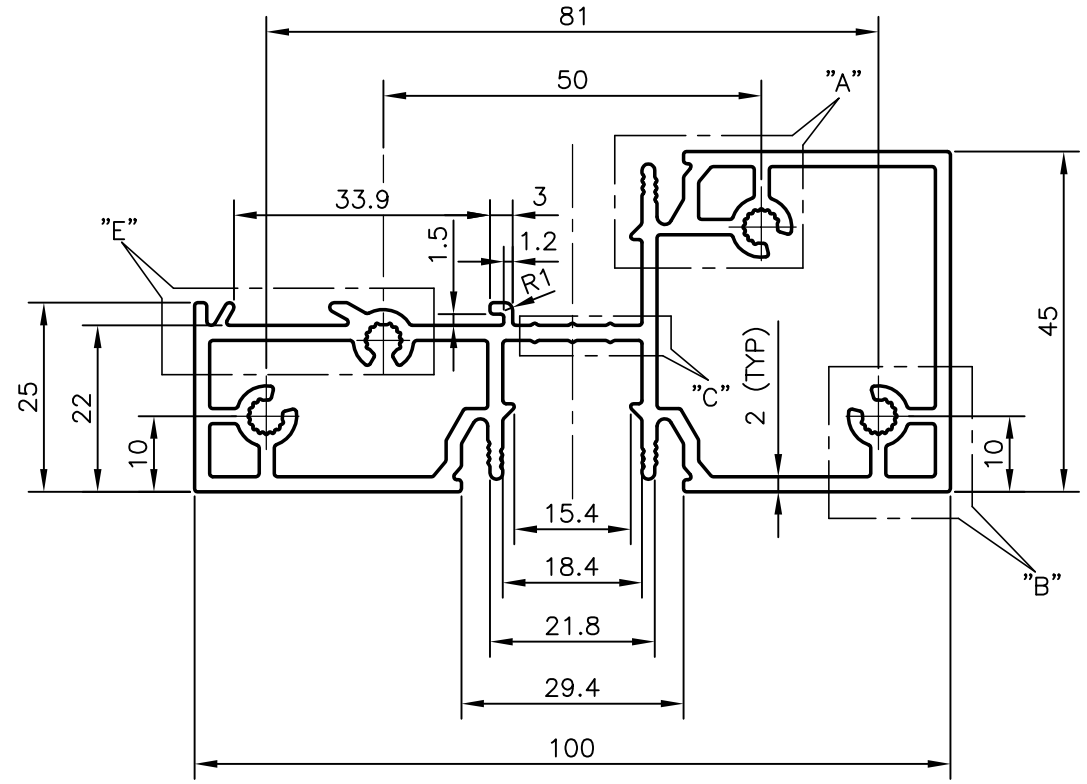

ISSUE – 2

SCREW BOX (DETAIL "D") DIMENSION CHANGED FROM
R3.50mm TO R4.10mm R3.50mm TO R4.00mm, ø7.0mm TO ø8.0mm & 1 NO.
GROOVE REMOVED TO STRENGTHEN THE SECTION
AND WEIGHT ALSO CHANGED FROM

DETAIL OF "B"
SCALE 3:1

ID IS DEVELOPED TO SUIT
NUMBER 10 SCREW

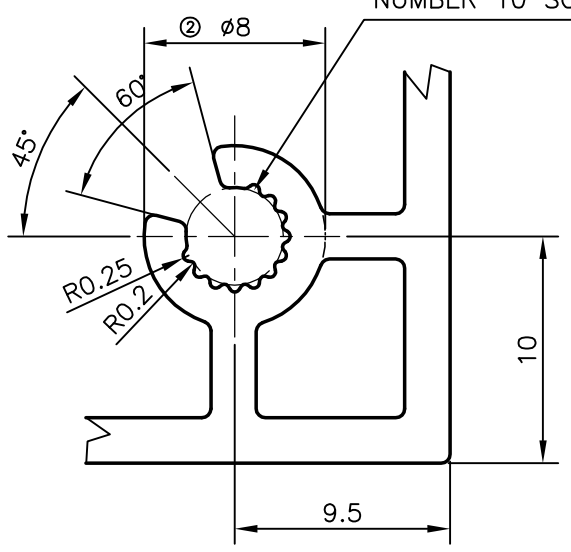

MATCHING SECTION
SCALE 1:1

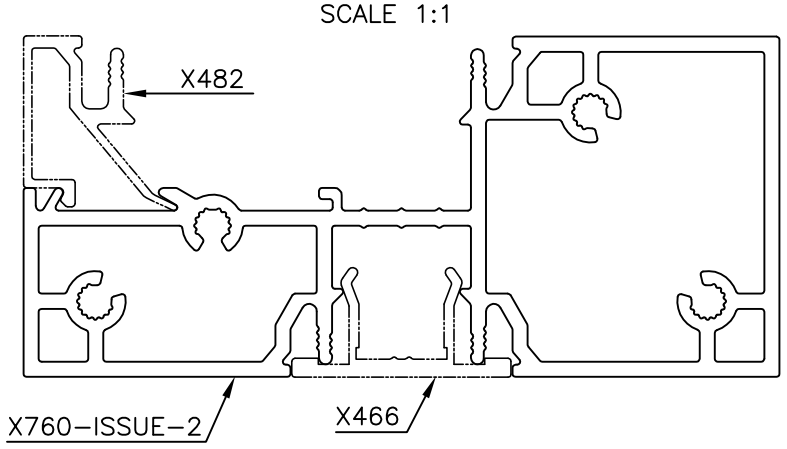

F = FULL RADIUS (2 PLACES)
GENERAL WALL THICKNESS = 2.00 mm

JINDAL SYMBOL OF QUALITY AN ISO 9001 COMPANY	*JINDAL ALUMINIUM LTD.* *BANGALORE–560073 (INDIA)*		NAME / DATE
		DRAWN	PRASANNA.H / 14–05–2008
		CHECKED	
		APPROVED	
1. ALL DIMENSIONS ARE IN mm. 2. ROUND OFF ALL SHARP CORNERS WITH 0.40 mm. 3. TOLERANCES WILL BE AS PER EN12020–2:2001 UNLESS OTHERWISE SPECIFIED		SCALE	1:1
		AREA mm^2	809.742
		PERIMETER mm.	407.849
		WEIGHT kg/m	2.186
PARTY'S NAME	MEERA ALUMINIUM UK LTD., UNITED KINGDOM	DRAWING No.	SECTION No.
PARTY'S DRAWING No.	GS–1005 & AS PER REQUIREMENT	P–7540	–
ALLOY & TEMPER	6063 T6	X760	X760–ISSUE–2
DESCRIPTION	MISC. SECTION		