P–7632–1
X769

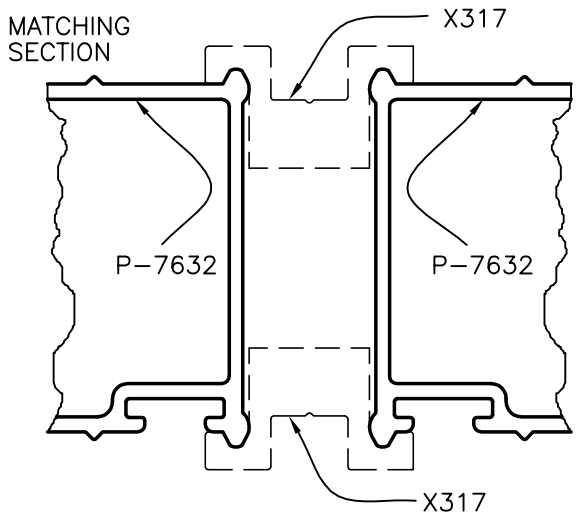

IT IS CRITICAL THAT THIS DIMENSION IS MAINTAINED TO ENSURE THAT DEFLECTION PERFORMANCE IS IN ACCORDANCE WITH AUSTRALIAN STANDARDS.

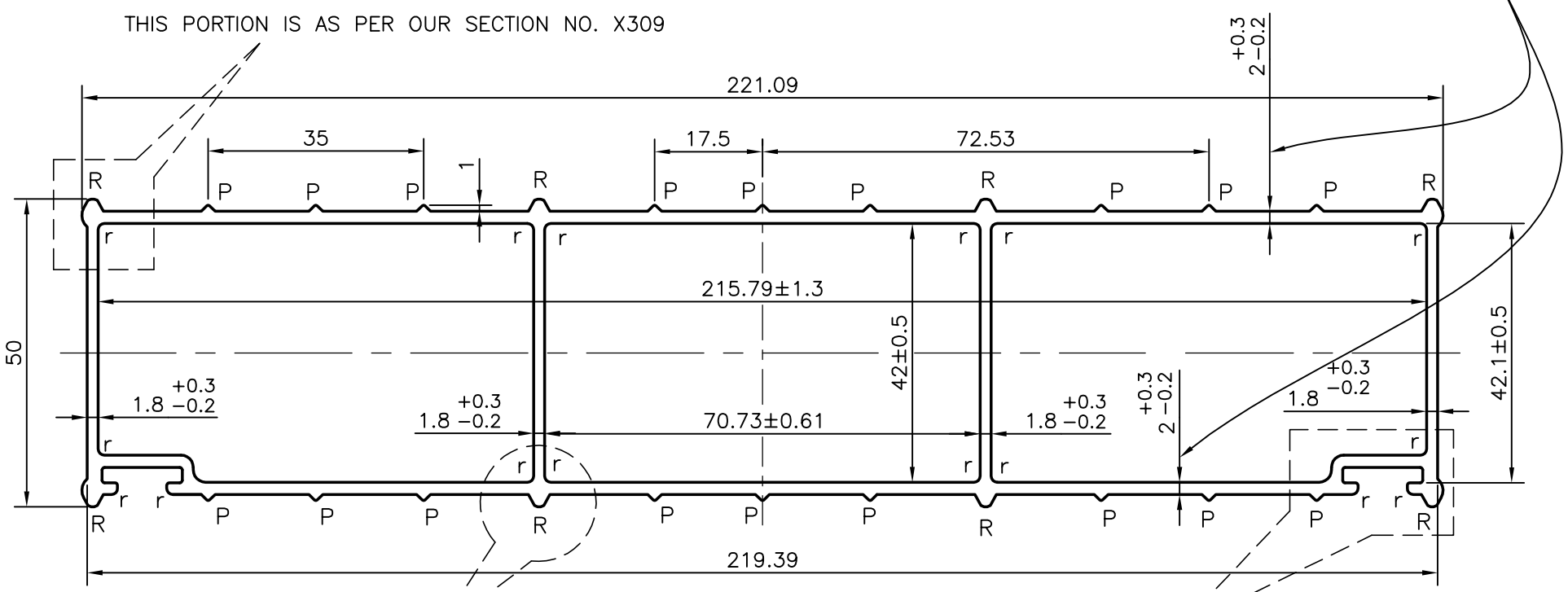

DETAIL"B"
SCALE 5:1

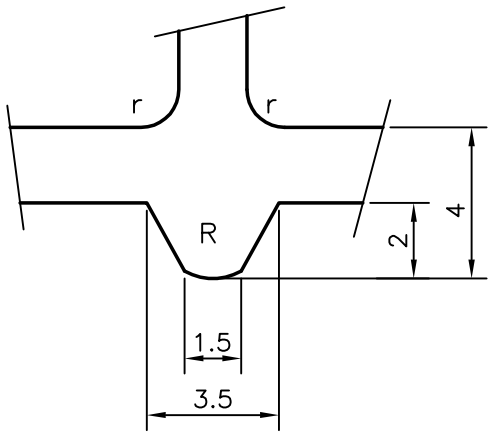

DETAIL"A"
SCALE 5:1

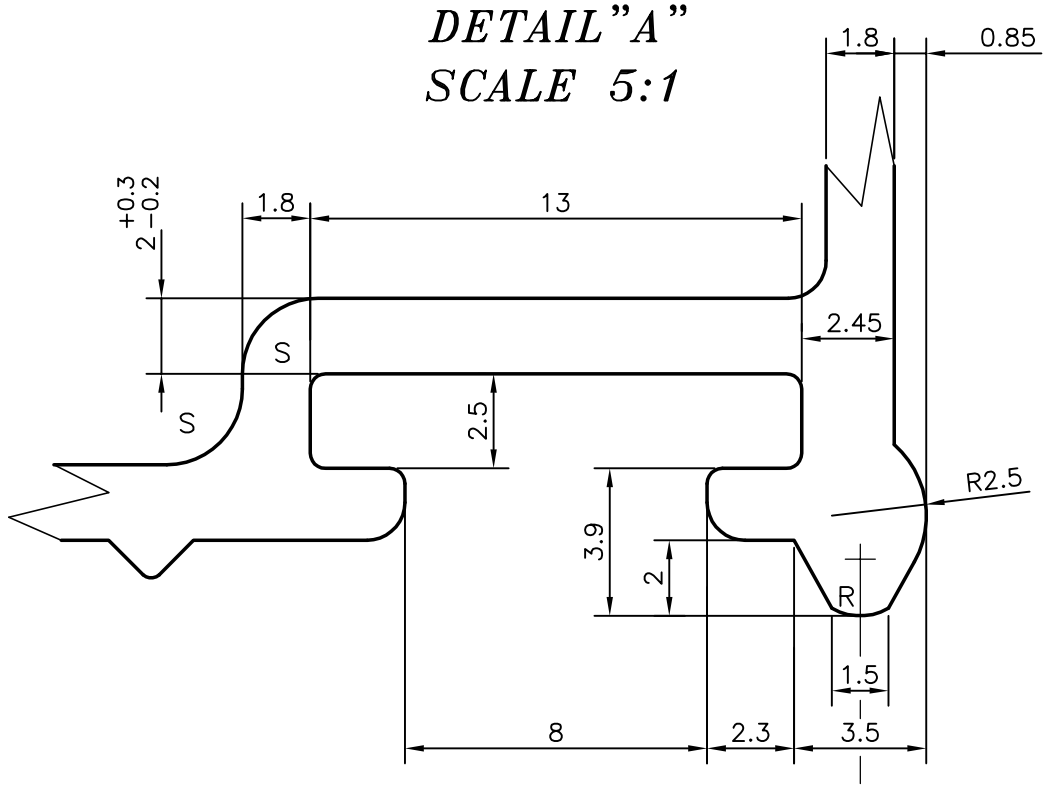

1. r = 1.0 RADIUS (16)
2. R = 1.50 RADIUS (8)
3. P = PIPS 1.0 HIGH x 90° (18)
4. S = 2.0 RADIUS (4 PLACES)
5. ALL EXTERNAL SURFACES VISIBLE

TWIST = 0.50mm/300mm LENGTH
STRAIGHTNESS = 0.60mm/300mm LENGTH
FLATNESS = 1.32mm
TOLERANCES WILL BE AS PER AS/NZS:–1866–1997

JINDAL — SYMBOL OF QUALITY AN ISO 9001 COMPANY	*JINDAL ALUMINIUM LTD.* *BANGALORE–560073 (INDIA)*		NAME	DATE
		DRAWN	PRASANNA.H	07–11–2007
		CHECKED		
		APPROVED		
1. ALL DIMENSIONS ARE IN mm. 2. ROUND OFF ALL SHARP CORNERS WITH 0.40 mm. 3. TOLERANCES WILL BE AS PER AS/NZS:1866–1997 UNLESS OTHERWISE SPECIFIED		SCALE		1:1
		AREA mm^2		1288.88
		PERIMETER mm.		600.824
		WEIGHT kg/m		3.480
PARTY'S NAME	MAYFAIR METALS., AUSTRALIA	DRAWING No.		SECTION No.
PARTY'S DRAWING No.	AS PER DRAWING & AS PER REQUIRMENT	P–7632–1		–
ALLOY & TEMPER	6005 T6	X769		X769
DESCRIPTION	SCAFFOLD PLANK			