P-8116-1

X863

DETAIL OF "B"
SCALE 3:1

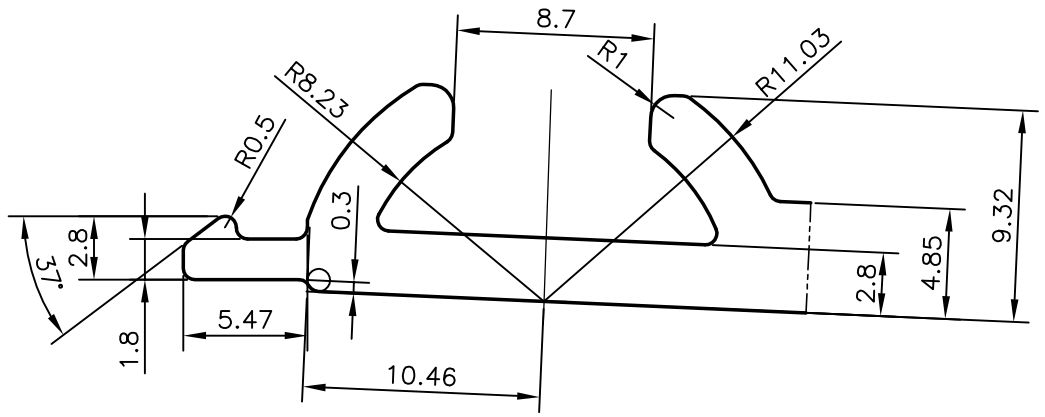


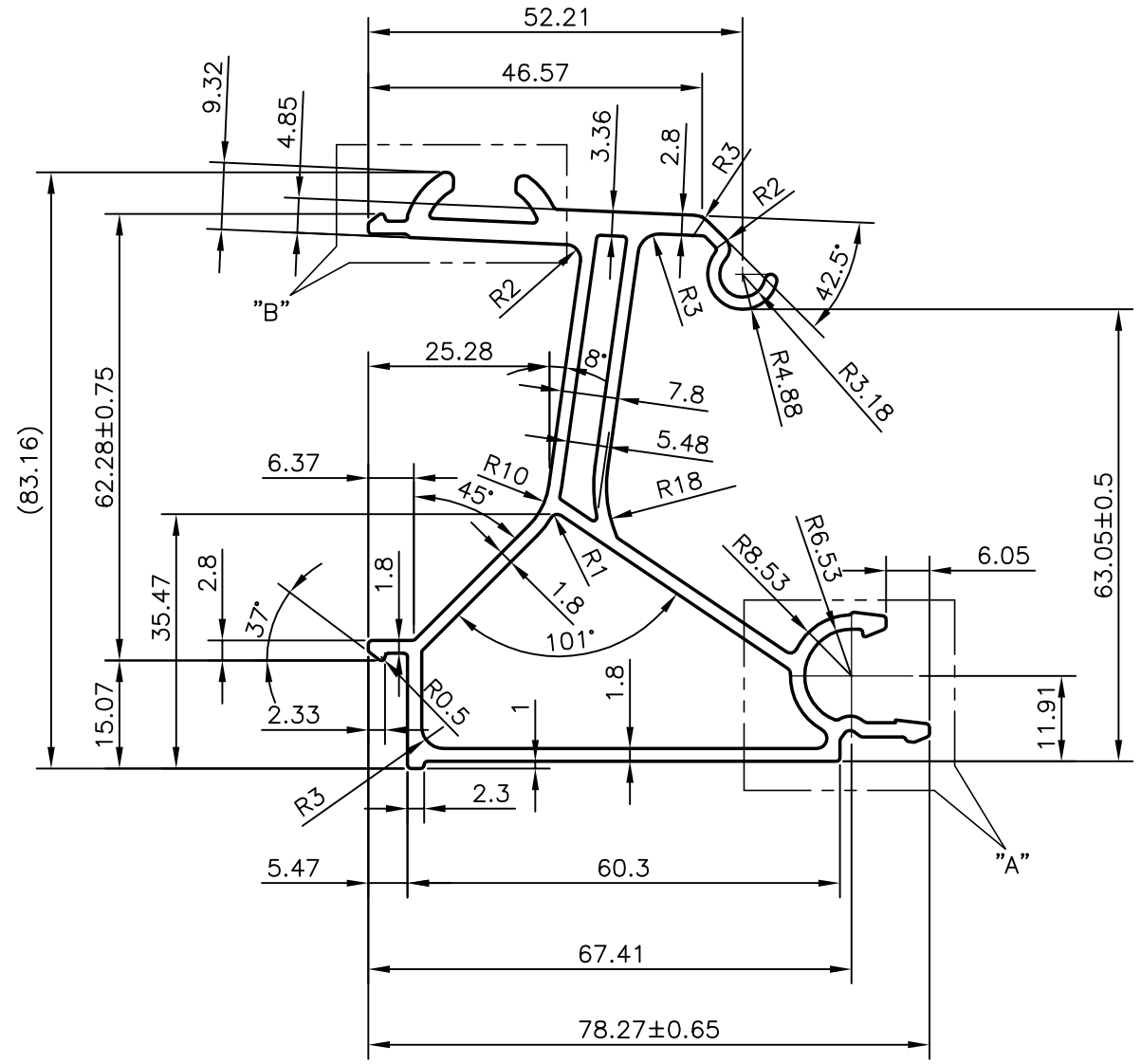


DETAIL OF "A"
SCALE 3:1

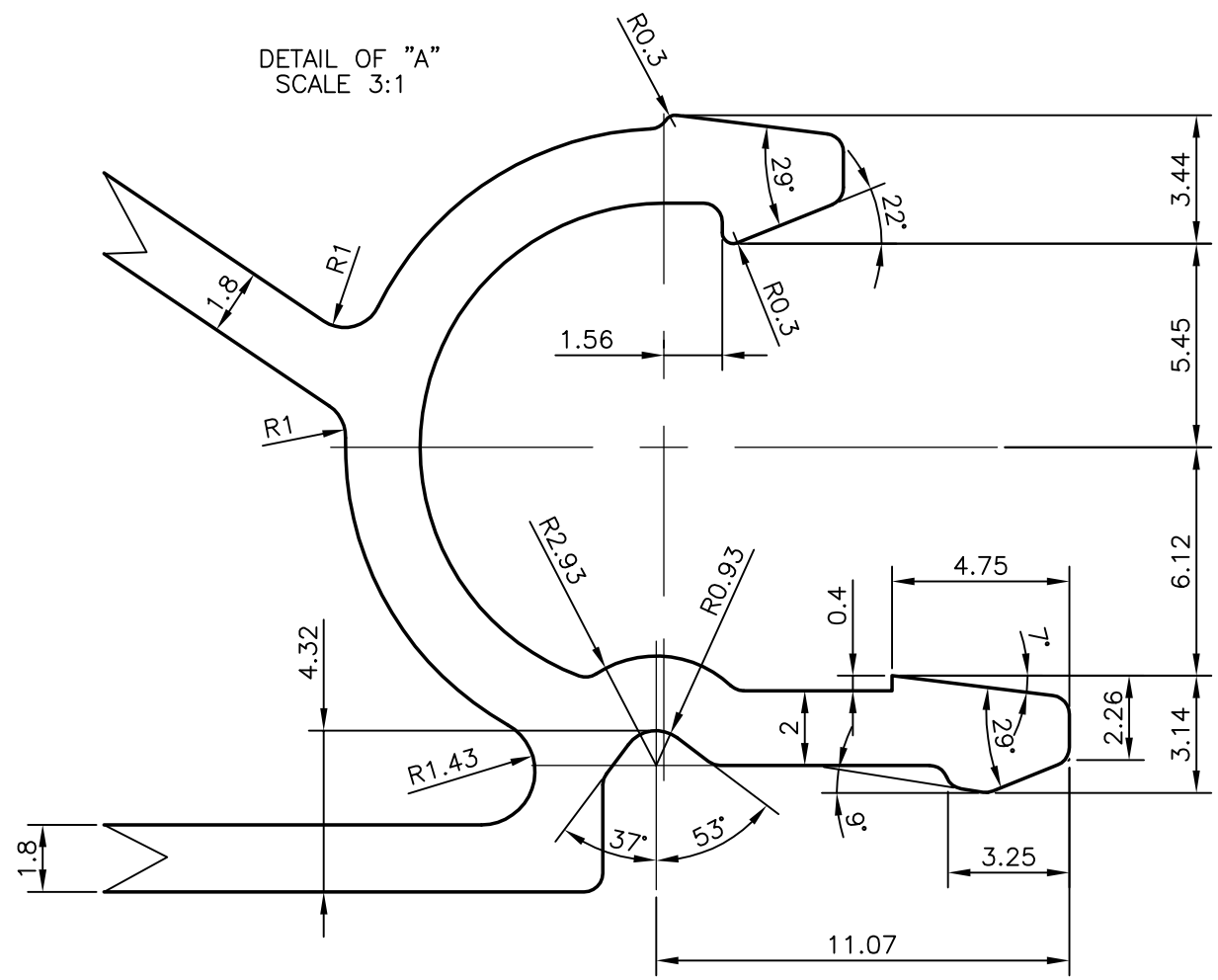


| | | | NAME | DATE |
|---|---|---|---|---|
| SYMBOL OF QUALITY AN ISO 9001 COMPANY | *JINDAL ALUMINIUM LTD.* *BANGALORE-560073 (INDIA)* | DRAWN | PRASANNA.H | 16-04-2008 |
| | | CHECKED | | |
| | | APPROVED | | |
| 1. ALL DIMENSIONS ARE IN mm. 2. ROUND OFF ALL SHARP CORNERS WITH 0.50 mm. 3. TOLERANCES WILL BE AS PER BS:EN-755 UNLESS OTHERWISE SPECIFIED | | SCALE | | 1:1 |
| | | AREA $mm^2$ | | 724.083 |
| | | PERIMETER mm. | | 452.98 |
| | | WEIGHT kg/m | | 1.955 |
| PARTY'S NAME | SYNSEAL EXTRUSIONS LTD., U.K | DRAWING No. | | SECTION No. |
| PARTY'S DRAWING No. | XLPEB1 / ISSUE NO. ORDER A | P-8116-1 | | – |
| ALLOY & TEMPER | 6063 T6 | X863 | | X863 |
| DESCRIPTION | E/BEAM FOR 2.5 DEG PITCH | | | |