P–10526
S2766
35066

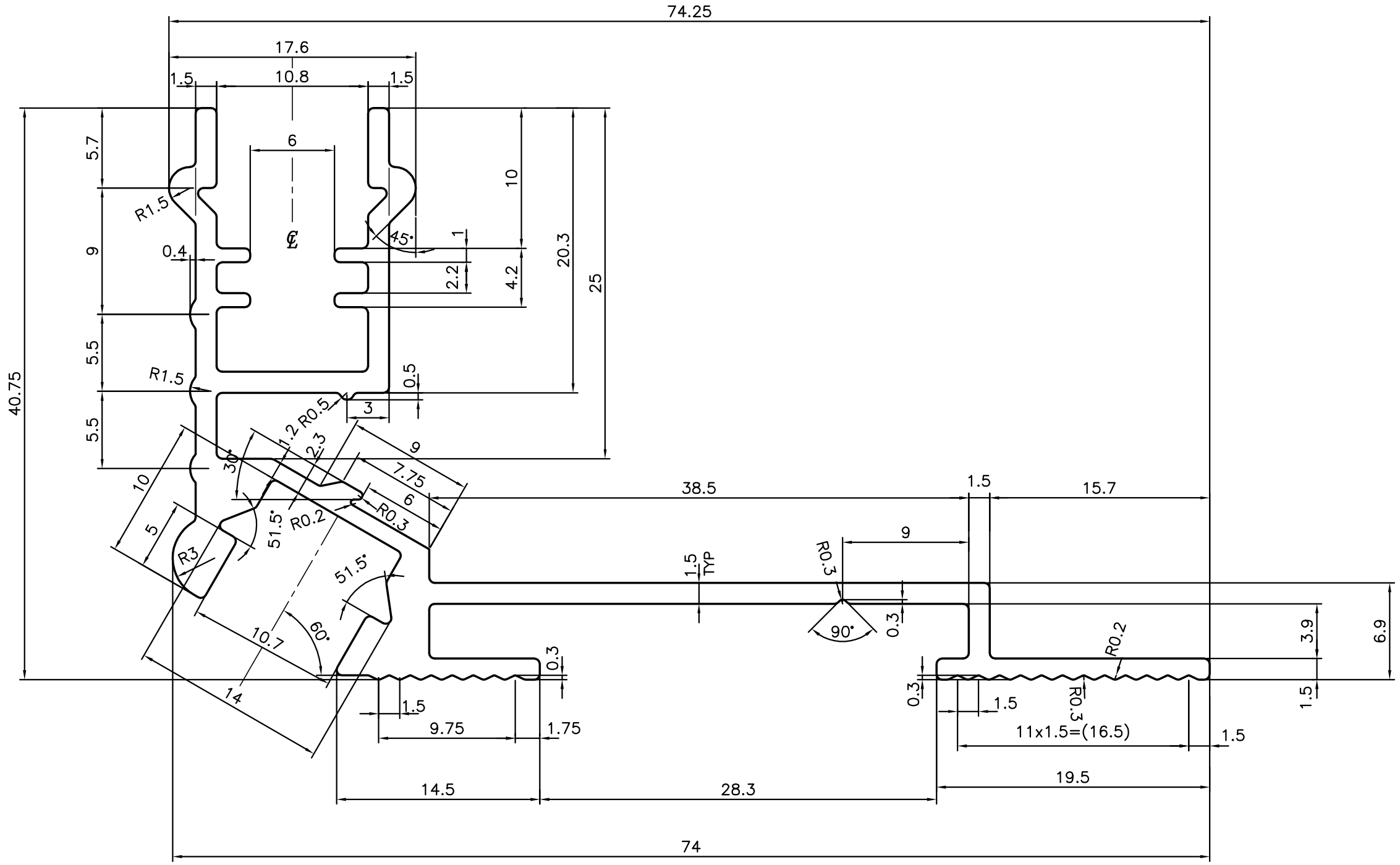

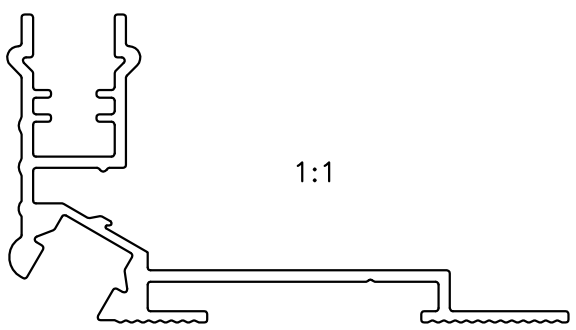

JINDAL SYMBOL OF QUALITY AN ISO 9001 COMPANY	*JINDAL ALUMINIUM LTD.* *BANGALORE–560073 (INDIA)*		NAME	DATE
		DRAWN	J.P.KAUSHIK	26–10–2010
		CHECKED		
		APPROVED	J.N.RAI	24–11–2010
1. ALL DIMENSIONS ARE IN mm. 2. ROUND OFF ALL SHARP CORNERS WITH 0.40 mm. 3. TOLERANCES WILL BE AS PER IS:3965–1981 UNLESS OTHERWISE SPECIFIED		SCALE		3:1
		AREA mm^2		296.694
		PERIMETER mm.		359.305
		WEIGHT kg/m		0.801
PARTY'S NAME	SIGN SUPPLY, NEW DELHI	DRAWING No.		SECTION No.
PARTY'S DRAWING No.	AS PER SAMPLE	P–10526		–
ALLOY & TEMPER	HE9 WP	S2766		S2766
		35066		35066
DESCRIPTION	MISC. SECTION			