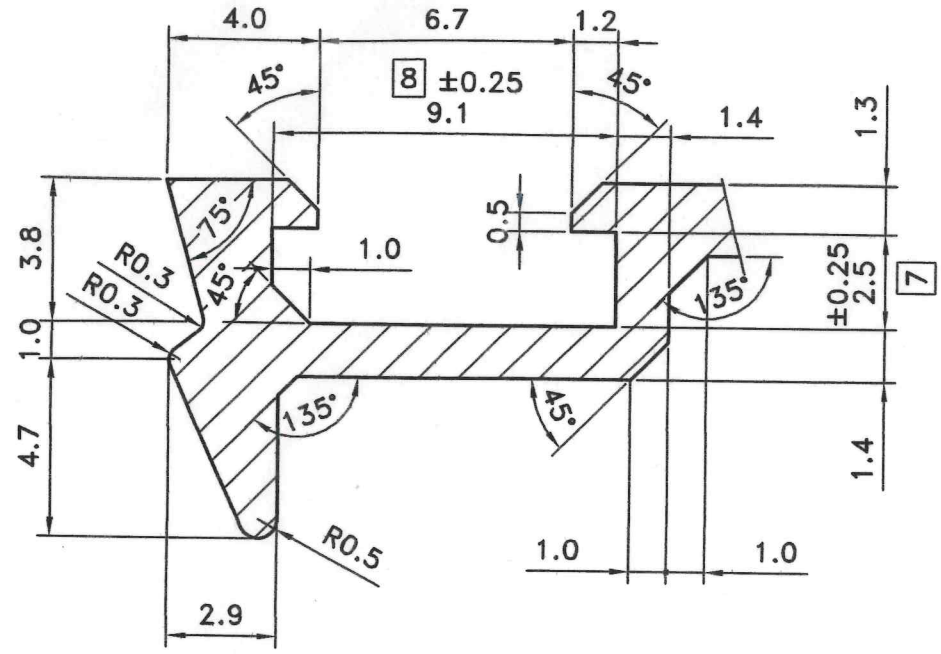

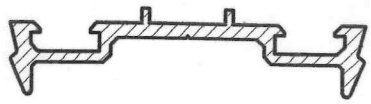

ACTUAL SIZE

DETAIL AT= A

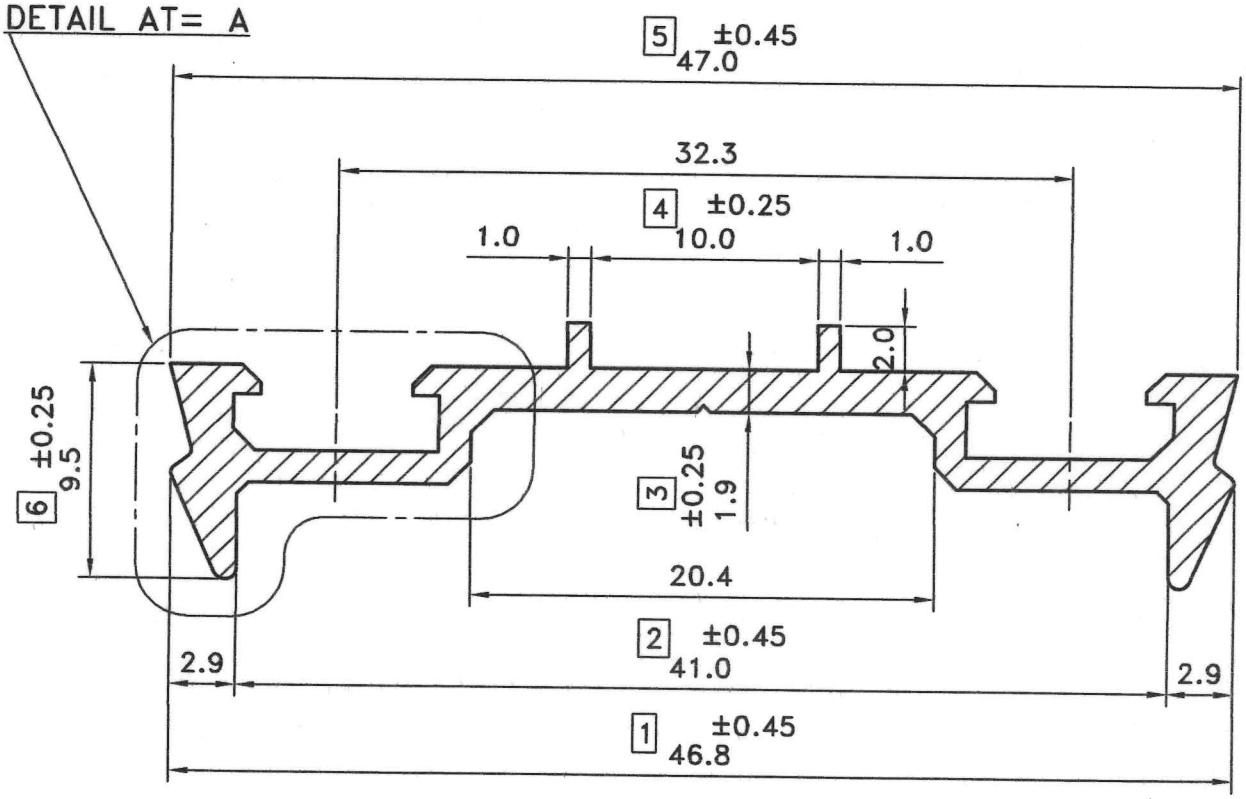

LOCATION:-P2 - 2HOLE
ALL DIMENSION ARE IN M.M.
UNSPECIFIED CORNER RADIUS:0.40

TOL. AS PER BS EN 755-9:2008
UNLESS SPECIFIED

TWIST =±1/4°/300 M.M./M.
STRAIGHTNESS = 1.50 M.M./MTR.
ANGULARITY =±1.5°

INDO ALUSYS INDUSTRIES LIMITED BHIWADI RAJASTHAN - 301019

PARTY SAMPLE & DRG.	MUM-AL-014	PARTY NAME	M/S STAR ALUBUILD PVT. LTD.				REF:-AS PER EMAIL ON Dt.-17.02.12		
				DRAWN	DHARMVIR	20.02.12	AREA	128.20	MM²
				CHECKED		28.3.12	WEIGHT	0.346	KG/M.
				APPROVED		28.3.12	WT. RANGE	-------	Kg/12'
				SCALE	1:1,3:1&5:1	DATE	ALLOY	6063-T6	
00	(REF.)			CRITICAL DIM.	*		MAL NO	12789	
REV. STATUS	REV. NO.	DESCRIPTION	SIGN DATE	PERIMETER	INT.	----	SEC.NO.	D-5411	
REVISION					EXT.	152.30			